# TX-5050WS10FC120-NGFENW-01H80

# PRODUCT SPECIFICATION

## Features:

◆Excellent transiting heat from LED chip operating under 800 mA.

◆Provide uniform cross distribution of positive white and warm white dual color scheme, mixed pure.

◆High luminous output.

◆No UV.

◆Encapsulated materials are environmentally certified and meet environmental requirements.

## Chip Material:

◆GaN

## Emitting Color:

◆White

◆Warm white

## Applications:

◆Auxiliary lighting

◆Ambient lighting

◆Architectural lighting

# Package Dimensions:

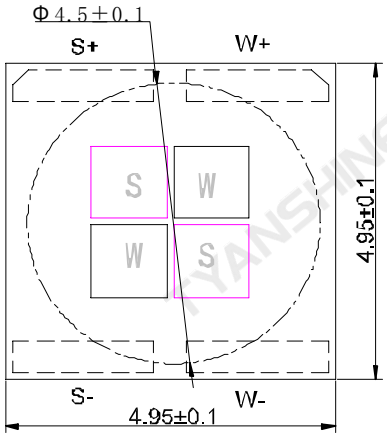


Top view

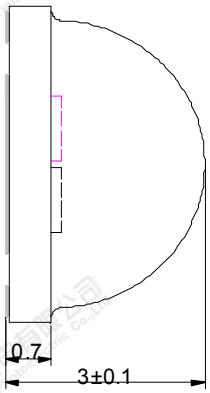


Side view

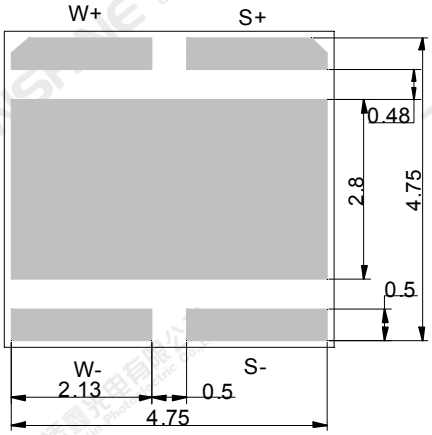


Bottom view

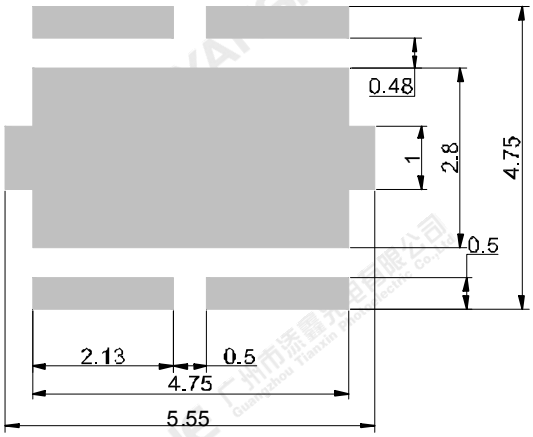


Recommended solder pad

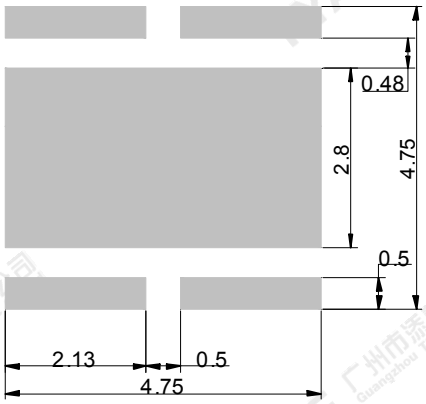


Recommended stencil pattern

**Notes:**

1.All dimensions are in millimeters .

2.Tolerances unless otherwise mentioned are ±0.1mm .

# Absolute Maximum Ratings (Tc=25℃)

| Parameter | Symbol | | Ratings | Unit |
|---|---|---|---|---|
| Forward Current | IF | W | 800 | mA |
| | | S | 800 | |
| Reverse Voltage | $V_R$ | | Not designed for reverse operation | V |
| Power Dissipation | $P_D$ | W | 5440 | mW |
| | | S | 5440 | |
| Junction Temperature | Tj | W | 150 | ℃ |
| | | S | 150 | |
| Electrostatic Discharge Threshold (ESD) | ESD | | 2000 | V |
| Storage Temperature | $T_{stg}$ | | -40~+70 | ℃ |
| Operation Temperature | $T_{opr}$ | | -30~+100 | |

**Notes:**

1.Specifications are subject to change without notice.

2.The data on this specification is for reference only and the actual data is in accordance with the acknowledgment.

3.Precautions for ESD:

STATIC SHIELD Electricity and surge damages the LED. It is recommended to use a wrist band or anti-electrostatic glove when handling the LED. All devices, equipment and machinery must be properly grounded.

# Electrical Optical Characteristics (Tc=25°C)

| Parameter | Symbol | Condition | Emitting color | Min. | Typ. | Max. | Units |
|---|---|---|---|---|---|---|---|
| Luminous Flux | $\varphi_v$ | If=700mA | W | 450 | 500 | 550 | lm |
| | | | S | 390 | 435 | 480 | |
| Forward Voltage | $V_f$ | | W | 6.0 | 6.4 | 6.8 | V |
| | | | S | 5.8 | 6.2 | 6.6 | |
| Correlated Colour Temperature | CCT | | W | 5400 | 6240 | 6500 | K |
| | | | S | 2690 | 2930 | 3000 | |
| Color Rendering Index | Ra | | W | 80 | 82.5 | — | — |
| | | | S | 80 | 82.5 | — | |
| Viewing Angle at 50％IV | $2\theta_{1/2}$ | | W | — | 120 | — | Deg |
| | | | S | — | 120 | — | |
| Reverse Current | $I_R$ | — | W | — | — | — | μA |
| | | | S | — | — | — | |
| Thermal Resistance Junction to Case | $R\theta_{J-C}$ | If=700mA | W | — | 1.8 | — | K/W |
| | | | S | — | 1.8 | — | |
| Temperature Coefficient of Voltage | V△F/T | | W | — | -6.0 | — | mV/℃ |
| | | | S | — | -4.8 | — | |

# White light Color coordinate filing (IF=350mA)

| Region | CCT Range | | X1 | Y1 | X2 | Y2 | X3 | Y3 | X4 | Y4 |
|---|---|---|---|---|---|---|---|---|---|---|
| | Min | Max | | | | | | | | |
| 2C1 | 2690K | 2780K | 0.4617 | 0.4138 | 0.4547 | 0.4115 | 0.4597 | 0.4216 | 0.4558 | 0.4239 |
| 2B1 | 2780K | 2870K | 0.4538 | 0.4097 | 0.4467 | 0.4075 | 0.4515 | 0.4174 | 0.4588 | 0.4198 |
| 2A1 | 2870K | 3000K | 0.4458 | 0.4057 | 0.4363 | 0.4028 | 0.4415 | 0.4134 | 0.4510 | 0.4163 |
| 5C | 5400K | 5700K | 0.3345 | 0.3437 | 0.3280 | 0.3366 | 0.3274 | 0.3516 | 0.3350 | 0.3597 |
| 5B | 5700K | 6000K | 0.3280 | 0.3346 | 0.3220 | 0.3275 | 0.3214 | 0.3425 | 0.3274 | 0.3506 |
| 6C | 6000K | 6500K | 0.3222 | 0.3255 | 0.3146 | 0.3164 | 0.3125 | 0.3312 | 0.3214 | 0.3415 |

**Notes:**

1. Luminous intensity is measured with a light sensor and filter combination that approximates the CIE eye-response curve.
2. $\theta_{1/2}$ is the off-axis angle at which the luminous intensity is half the axial luminous intensity.
3. Luminous flux measurement tolerance:±15%.
4. Forward voltage measurement tolerance:±0.15V.

# Typical Electrical/Optical Characteristics Curves

(25℃ Ambient Temperature Unless Otherwise Noted)

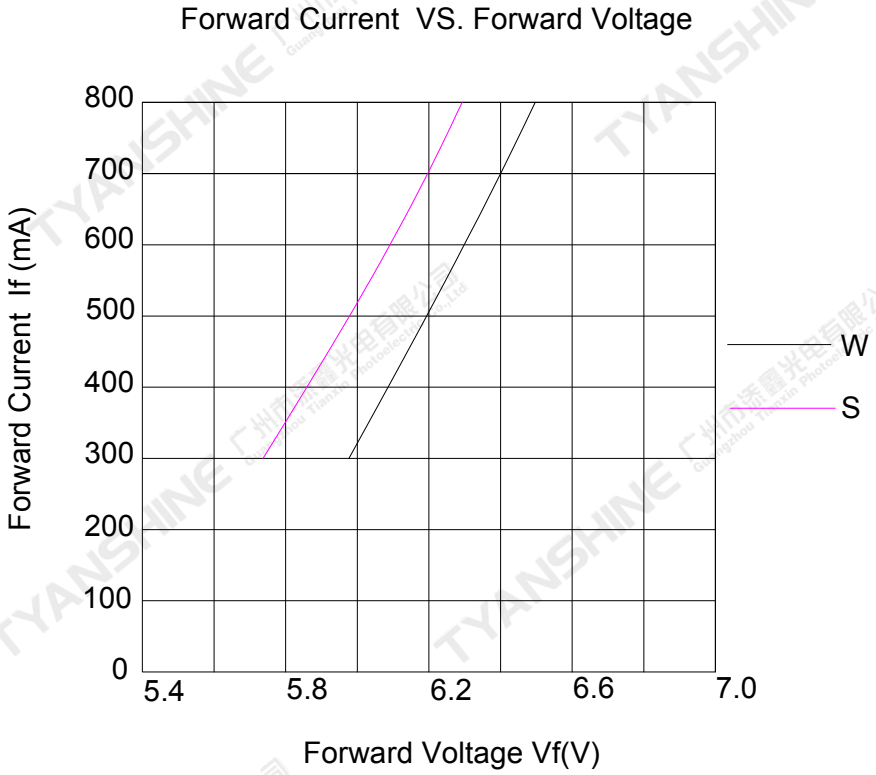


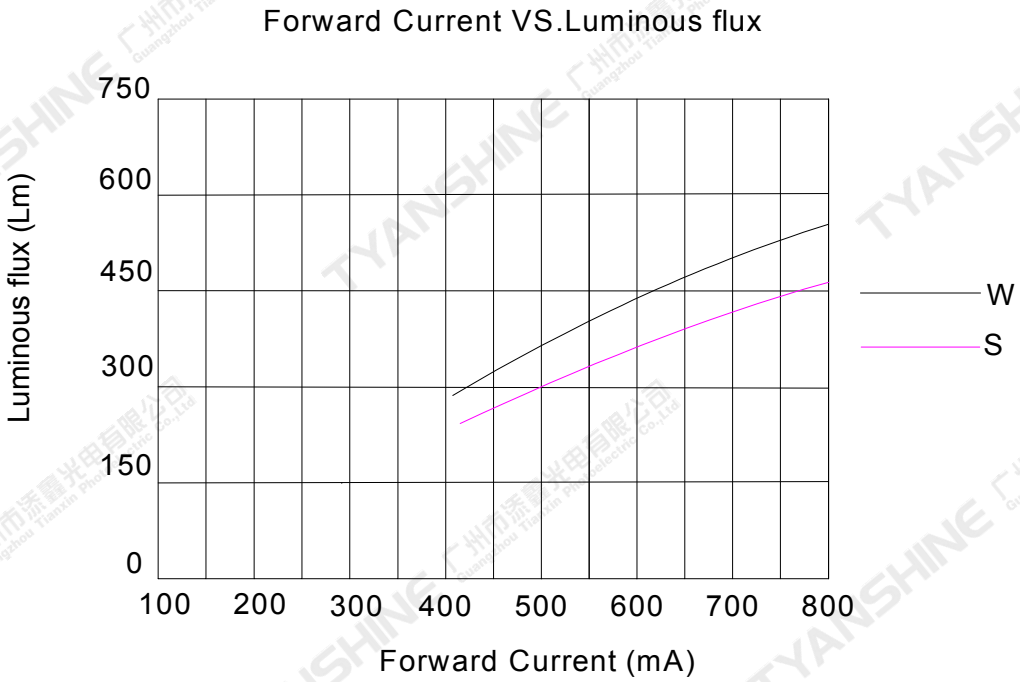

Temperature VS. Relative color temperature (IF=700mA)

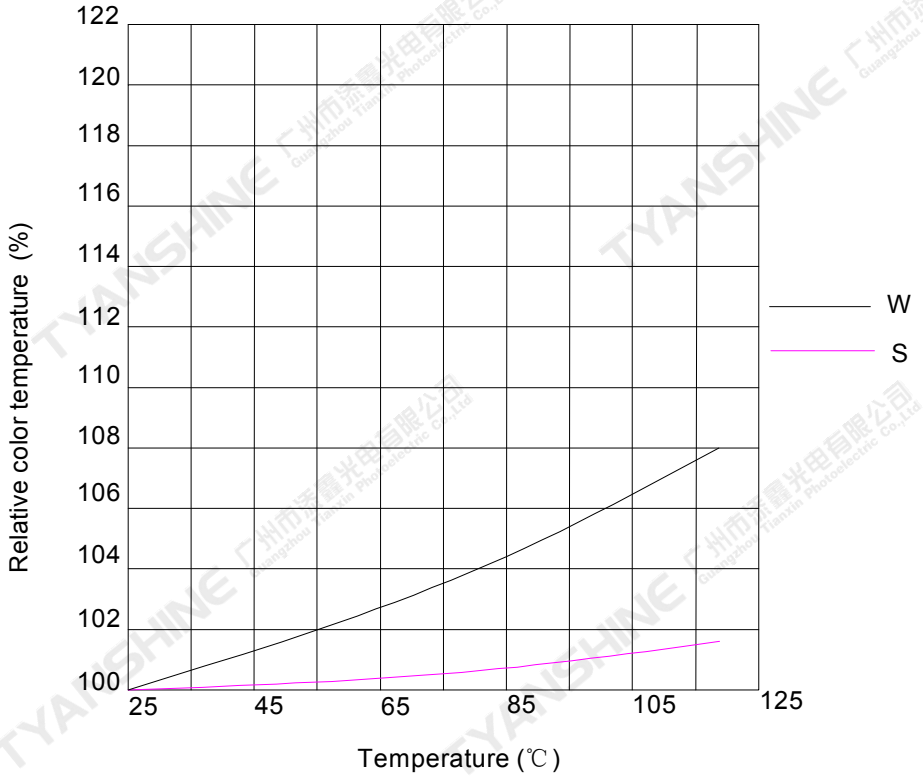


Temperature VS. Relative Luminous Flux (IF=700mA)

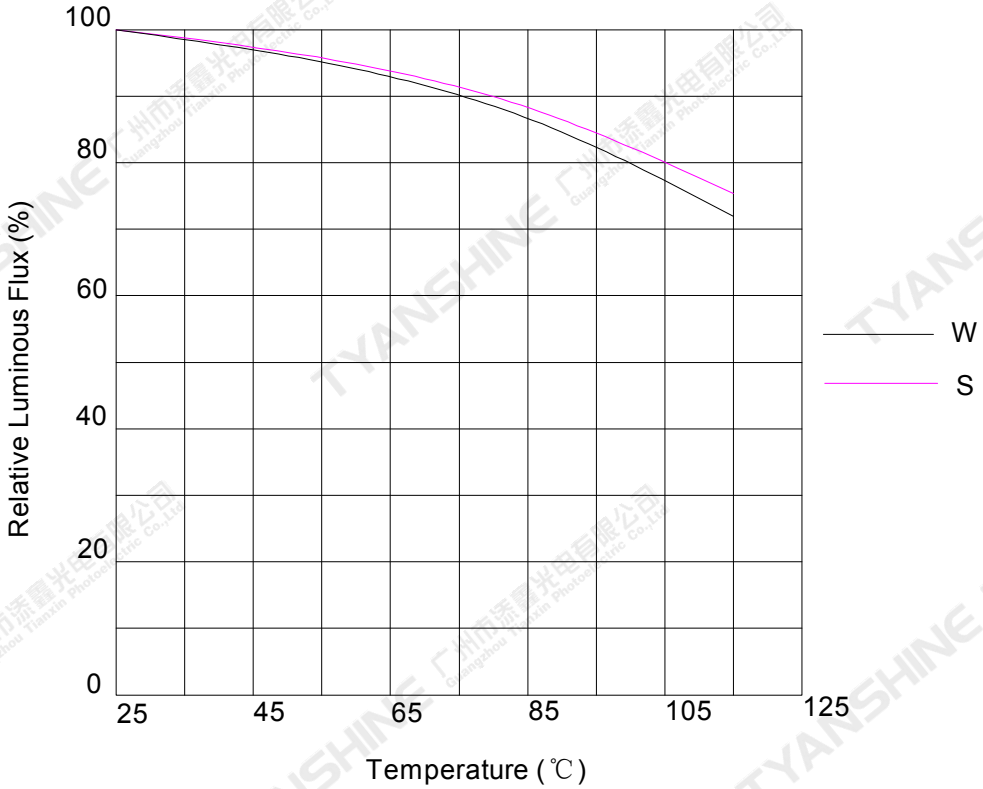

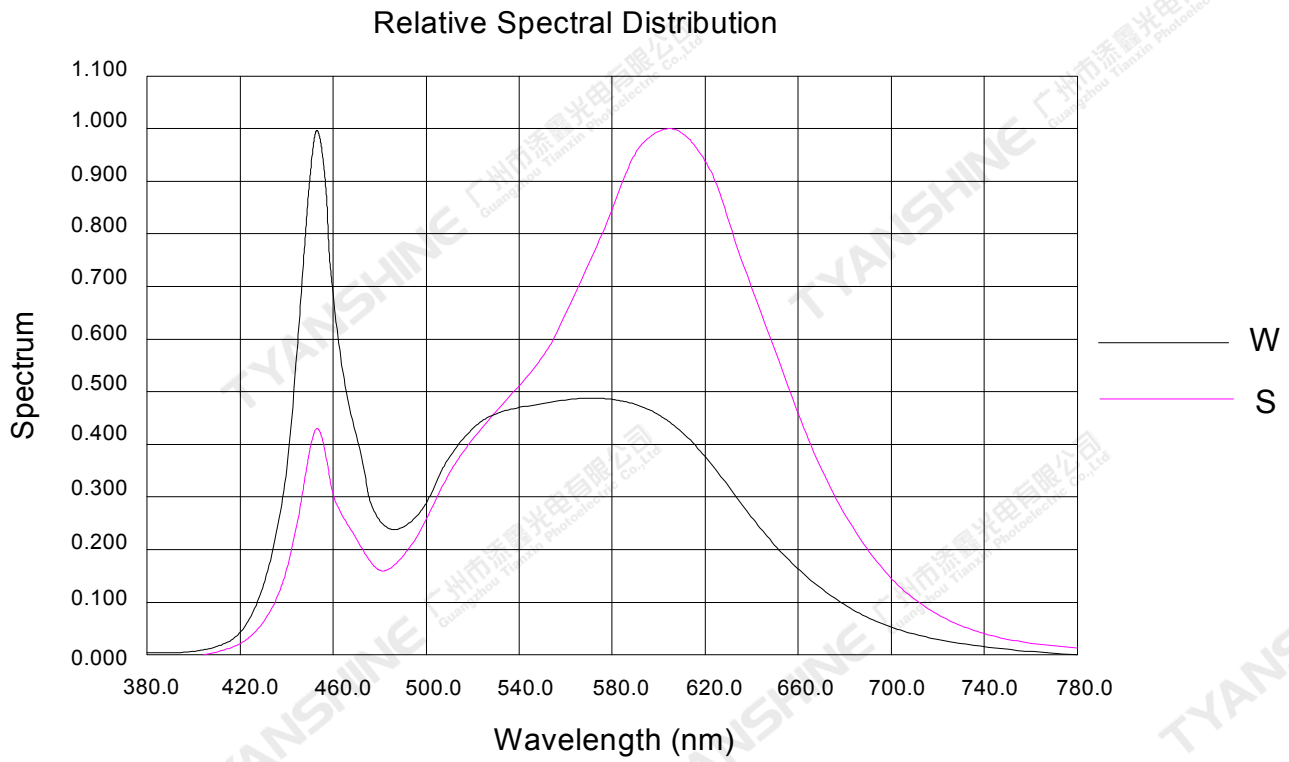


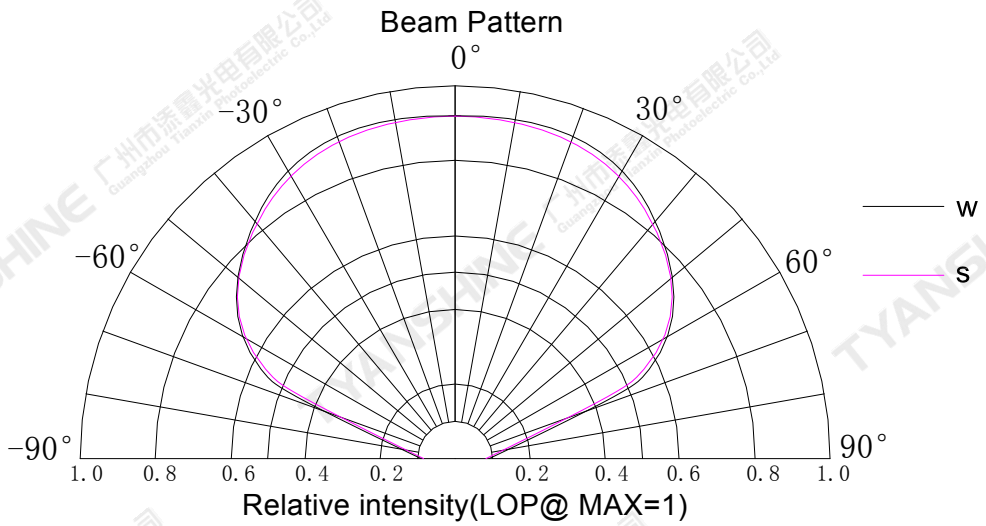


**Notes:**

1. 2θ 1/2 is the off axis angle from lamp centerline where the luminous intensity is 1/2 of the peak value.
2. View angle tolerance is ± 5°.

# Usage Precautions

## Storage Environment Condition

Temperature: 5℃ ~ 30℃ (41℉ ~ 86℉)

Humidity: 60% RH Max.

## Soldering Condition

Use the conditions shown to the under figure.

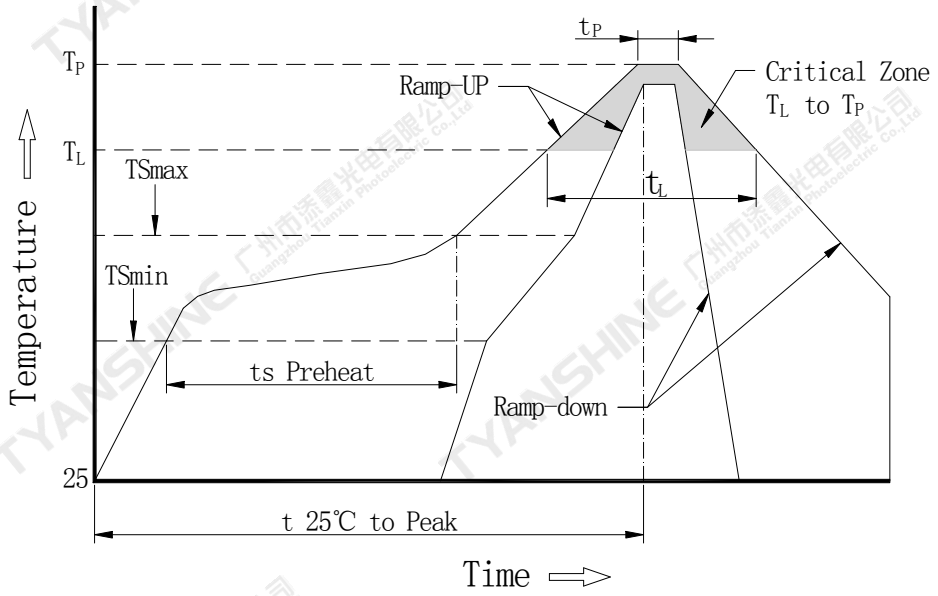


| Profile Feature | Lead-Based Solder |
|---|---|
| Average Ramp-Up Rate ($Ts_{max}$ to $T_p$) | 3℃/second max. |
| Preheat: Temperature Min ($Ts_{min}$) | 100℃ |
| Preheat: Temperature Max ($Ts_{max}$) | 150℃ |
| Preheat: Time ($Ts_{min}$ to $Ts_{max}$) | 60-120 seconds |
| Time Maintained Above: Temperature ($T_L$) | 183℃ |
| Time Maintained Above: Time ($T_L$) | 60-150 seconds |
| Peak/Classification Temperature ($T_P$) | 225℃ |
| Time Within 5℃ of Actual Peak Temperature ($T_P$) | 10-30 seconds |
| Ramp-Down Rate | 6℃/second max. |
| Time 25℃ to Peak Temperature | 6 minutes max. |

**Note**:

All temperatures refer to topside of the package, measured on the package body surface.

# Dimensions For Cannulation And Packaging

## Quantity:500PCS

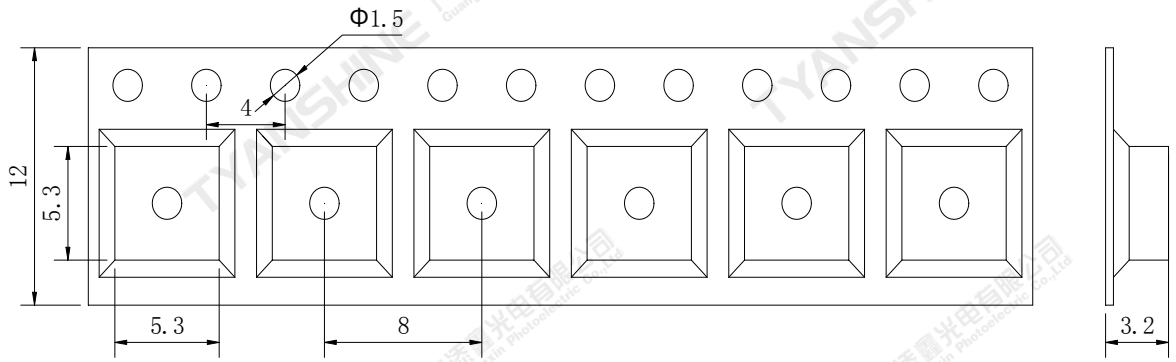


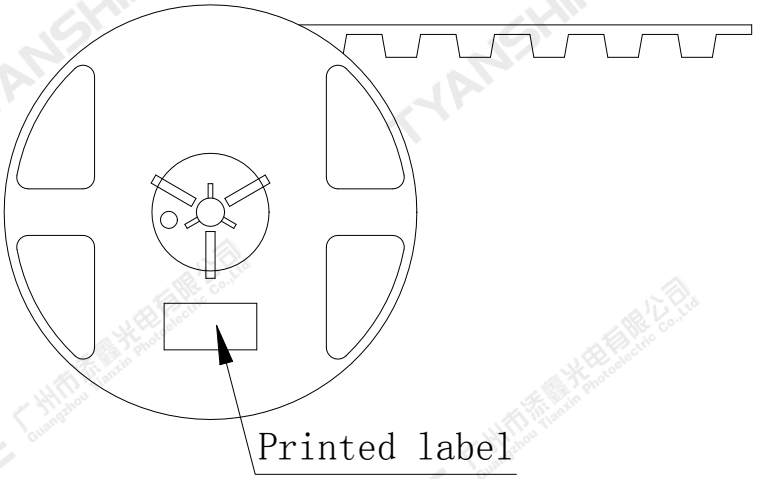


**Notes:**

1. All dimensions are in millimeters.
2. Tolerances are ±2.0 mm unless otherwise noted.
3. The products are packaged together with silica gel, Transport, not to the weight of welding LED light-emitting area, As a result of the weight of LED light-emitting zone in the quality of, Irre sponsible of the Company.